KOHLER®

Roughing-In

K-12181, K-12182
FAIRFAX®
LAVATORY FAUCET

Product Information

Applicable product:	
Lavatory faucet – with escutcheon plate and metal drain	K-12181
Lavatory faucet – with escutcheon plate and plastic drain	K-12181-D
Lavatory faucet – with escutcheon ring and metal drain	K-12182
Lavatory faucet – with escutcheon ring and plastic drain	K-12182-D
Lever handle is ADA compliant.	ADA

Optional accessories:	
Single-control plug button set	K-12001
Additional flow options are available (refer to the Kohler Price Book)	_____

Installation Notes

Install this faucet following the installation instructions provided.
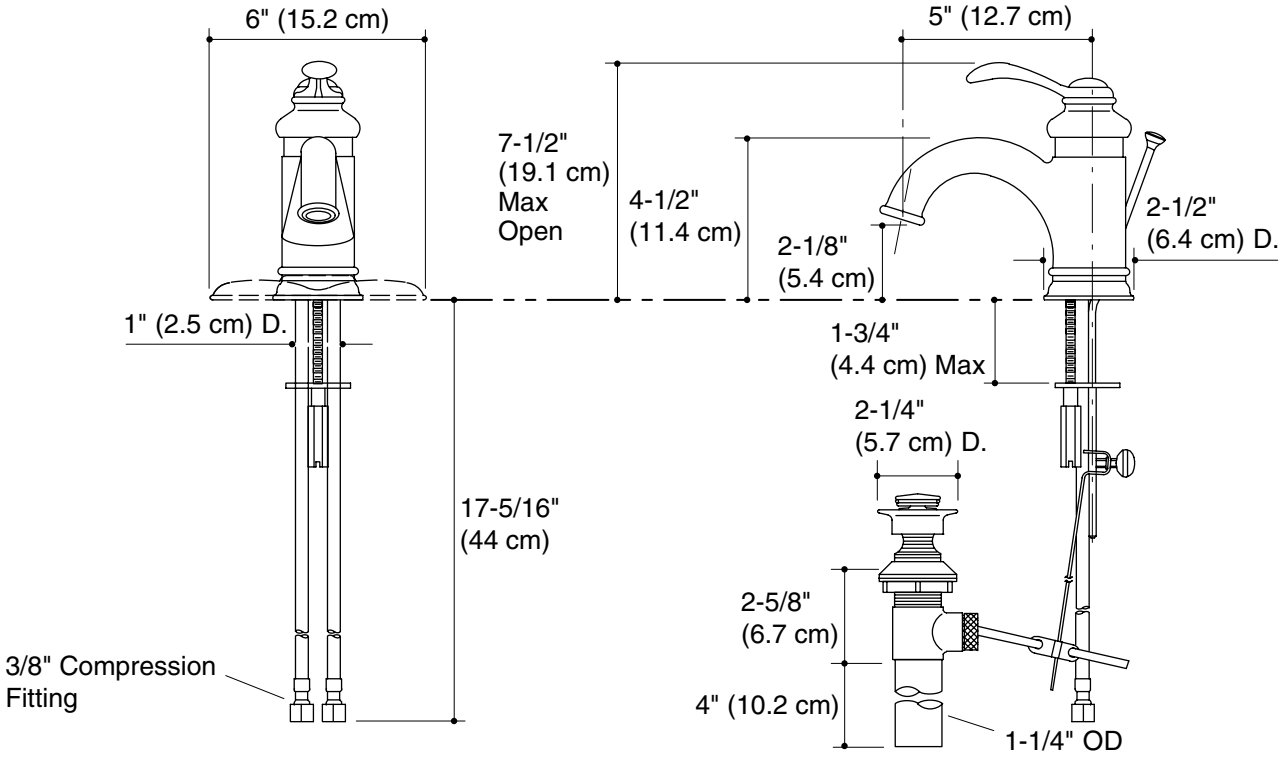
Lower flow aerator options are available. Please refer to the Kohler Price Book.